HIOKI

INSTRUCTION MANUAL

3286

CLAMP ON POWER HiTESTER

HIOKI E. E. CORPORATION

Contents

Introduction

Thank you for purchasing this HIOKI "3286 CLAMP ON POWER HiTESTER." To get the maximum performance from the product, please read this manual first, and keep this at hand.

Importance

This product is the clamp on power meter which keeps measurement function of the multiple functions. If you set up a function mode in advance, the mode will start up from the next use. Have it set up for the preferable use. (Refer to "2.10 Measurement Condition Save Function)

Request

We have tried to bring this manual as close to perfection as we could achieve. If perchance you find any unclear portions, mistakes, omissions, or the like, we would be most obliged if you could please notify us of them via any HIOKI agent, or directly.

Shipping Check

When you receive the product, inspect it carefully to ensure that no damage occurred during shipping. In particular, check the accessories, panel switches, and connectors.
If damage is evident, or if it fails to operate according to the specifications, contact your dealer or HIOKI representative.

Check the 3286 Unit and the Supplied Accessories

Main unit

3286 CLAMP ON POWER HiTESTER

Supplied accessories

9355 Carrying Case	1
9635 Voltage cord	1
Hand Strap	1
Battery 6LF22 alkaline battery	1
Instruction manual	1

Options

9636 RS-232C CABLE
9636-01 RS-232C PACKAGE
9442 PRINTER (DPU-414, Seiko Instrument Inc.)

Safety

⚠ DANGER

This equipment is designed according to IEC 61010 Safety Standards, and has been tested for safety prior to shipment. Incorrect measurement procedures could result in injury or death, as well as damage to the equipment. Please read this manual carefully and be sure that you understand its contents before using the equipment. The manufacturer disclaims all responsibility for any accident or injury except that resulting due to defect in its product.

This manual contains information and warnings essential for safe operation of the product and for maintaining it in safe operating condition. Before using the product, be sure to carefully read the following safety notes.

The following symbols in this manual indicate the relative importance of cautions and warnings.

⚠ DANGER	Indicates that incorrect operation presents extreme danger of accident resulting in death or serious injury to the user.
⚠ WARNING	Indicates that incorrect operation presents significant danger of accident resulting in death or serious injury to the user.
⚠ CAUTION	Indicates that incorrect operation presents possibility of injury to the user or damage to the equipment.
NOTE	Denotes items of advice related to performance of the equipment or to its correct operation.

Safety Symbols

⚠	The ⚠ symbol printed on the product indicates that the user should refer to a corresponding topic in the manual (marked with the ⚠ symbol) before using the relevant function. In the manual, the ⚠ symbol indicates particularly important information that the user should read before using the product.
∼	Indicates AC (Alternating Current).
⎓	Indicates DC (Direct Current).
⧈	Indicates a device which is double-insulated.

We define measurement tolerances in terms of rdg. (reading) and dgt. (digit) values, with the following meanings:

rdg. (reading or displayed value)
The value currently being measured and indicated on the measuring product.

dgt. (resolution)
The smallest displayable unit on a digital measuring product, i.e., the input value that causes the digital display to show a "1".

Overvoltage Categories

To ensure safe use of measurement, IEC 60664 establishes safety level standards for different locations, classified as CAT I through CAT IV, and called overvoltage categories. These are defined as follows.

CAT I: Secondary electrical circuits that are connected to a wall outlet through a transformer or similar device.

CAT II: Primary electrical circuits in equipment connected to a wall outlet via a power cord (portable tools, household appliances, etc.)

CAT III: Primary electrical circuits of heavy equipment (fixed installations) connected directly to the distribution panel, and feeders between the distribution panel and outlets.

CAT IV: The circuit from the service drop to the service entrance, then to the power meter and to the primary overcurrent protection device.

Higher-numbered categories correspond to electrical environments with greater momentary energy, so a measurement device designed for CAT III environments can endure greater momentary energy than a device designed for CAT II. Use of a lower category product in a higher category environment could result in a severe accident and must be carefully avoided.

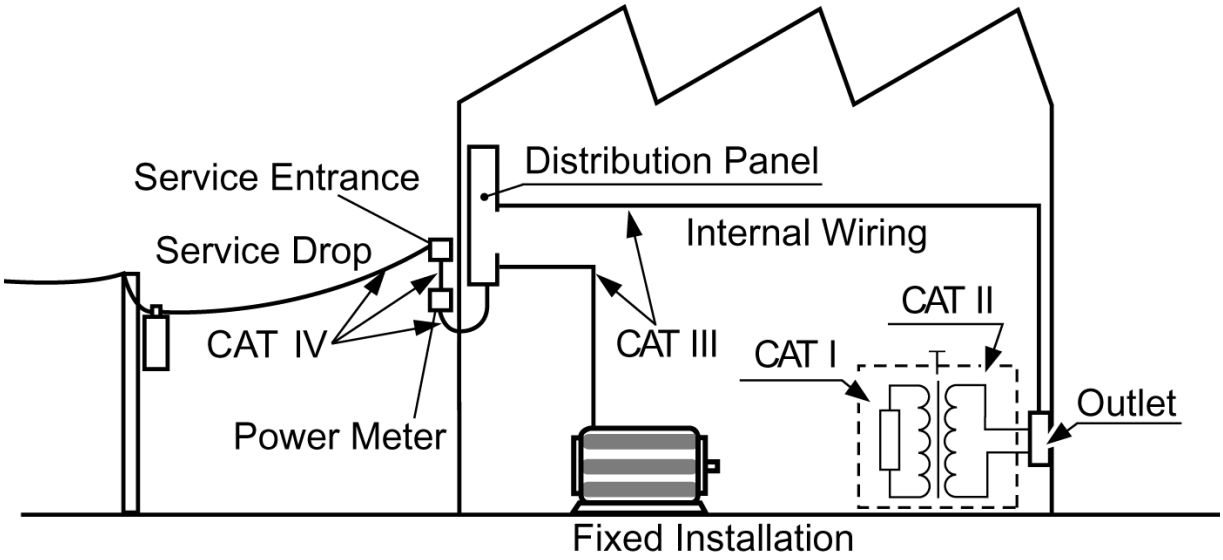

Attentions During Use

Follow these precautions to ensure safe operation and to obtain the full benefits of the various functions.

⚠ DANGER

- **To avoid short circuits and potentially life-threatening hazards, never attach the clamp to a circuit that operates at more than the maximum rated voltage / 600V, or over bare conductors.**
- **Clamp-on probe should only be connected to the secondary side of a breaker, so the breaker can prevent an accident if a short circuit occurs. Connections should never be made to the primary side of a breaker, because unrestricted current flow could cause a serious accident if a short circuit occurs.**

⚠ WARNING

- **To avoid electric shock, do not allow the product to get wet, and do not use it when your hands are wet.**
- **To avoid electric shock when measuring live lines, wear appropriate protective gear, such as insulated rubber gloves, boots and a safety helmet.**

⚠ **WARNING**

- **The clamp sensor and voltage cord should be connected to live lines after being connected to the unit. To prevent short-circuiting and electric shock, observe the following precautions:**
  Do not short-circuit the two wires of a line with the clip of the voltage cord. Do not use the clamp sensor on bare conductors.
- **To avoid electric shock when replacing the battery, first disconnect the voltage cable or clamp from the object to be measured. After replacing the battery, always replace the cover and tighten the screw before using the unit.**
- **When replacing the battery, be sure to insert them with the correct polarity. Otherwise, poor performance or damage from battery leakage could result. Replace battery only with the specified type.**
- **To avoid the possibility of explosion, do not short circuit, disassemble or incinerate batteries.**
- **Handle and dispose of batteries in accordance with local regulations.**

⚠ CAUTION

- Avoid stepping on or pinching the cable, which could damage the cable insulation.
- Keep the cables well away from heat sources, as bare conductors could be exposed if the insulation melts.
- If the protective functions of the product are damaged, either remove it from service or mark it clearly so that others do not use it inadvertently.
- Do not exceed the maximum input current rating, which depends on the frequency of the current being measured. Be careful about the evolution of heat, when the input frequency is high.

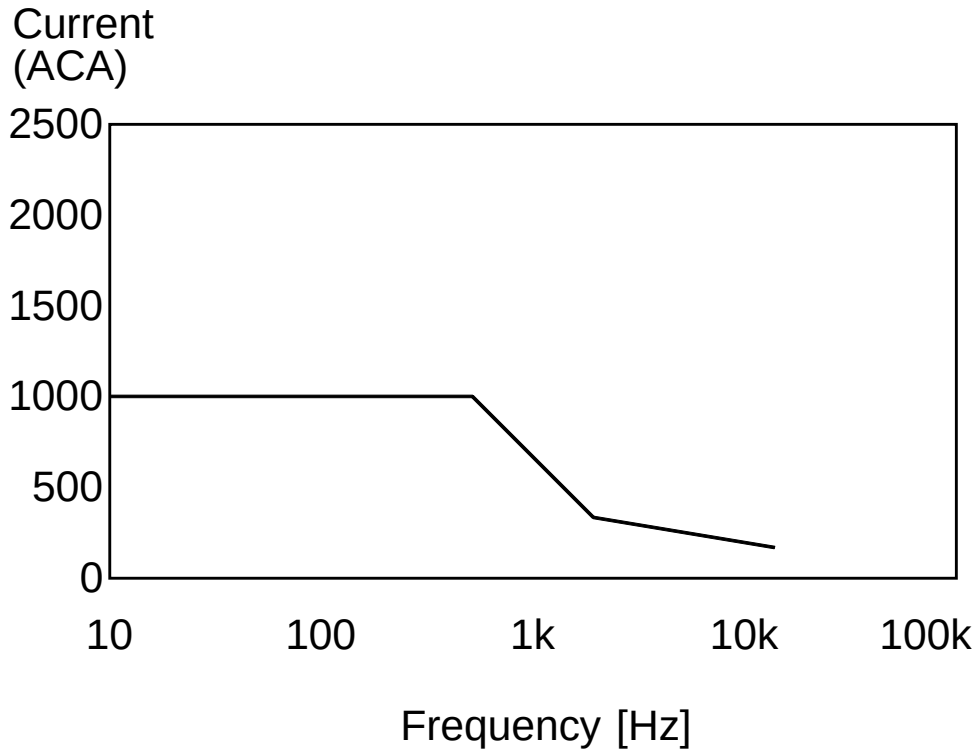

⚠ CAUTION

- Do not store or use the product where it could be exposed to direct sunlight, high temperature or humidity, or condensation. Under such conditions, the product may be damaged and insulation may deteriorate so that it no longer meets specifications.
- The product is a precision instrument: do not clamp any foreign objects in the end of the clamp core, or insert anything in the core gap.
- To avoid damage to the product, protect it from vibration or shock during transport and handling, and be especially careful to avoid dropping. Do not exert excessive pressure on the clamp sensor or attempt to wedge the sensor into a tight spot for measurement.
- Measurements are degraded by dirt on the mating surfaces of the clamp-on sensor, so keep the surfaces clean by gently wiping with a soft cloth.
- Before using the product the first time, verify that it operates normally to ensure that the no damage occurred during storage or shipping. If you find any damage, contact your dealer or HIOKI representative.
- This product is designed for indoor use, and operates reliably from 0℃ to 40℃.
- This product is not designed to be entirely water- or dust-proof. To avoid damage, do not use it in a wet or dusty environment.
- Adjustments and repairs should be made only by technically qualified personnel.

⚠ CAUTION

- Do not use the product if the battery is exhausted (when the B mark lights in the display area). Be sure to replace the exhausted battery with a new one.
- When replacing the battery, make sure that the metal battery snap fitting is firmly connected. If the metal fitting is loose, adjust it and recheck the connection.
- To avoid corrosion from battery leakage, remove the batteries from the product if it is to be stored for a long time.

NOTE

- Before using the product, make sure that the insulation on the voltage cable and probes is undamaged and that no bare conductors are improperly exposed. Using the product in such conditions could cause an electric shock. Replace the test leads and probes with the specified HIOKI Model 9635.
- Accurate measurement may be impossible in the presence of strong magnetic fields, such as near transformers and high-current conductors, or in the presence of strong electromagnetic fields such as near radio transmitters.
- To clean the product, wipe it gently with a soft cloth moistened with water or mild detergent. Never use solvents such as benzene, alcohol, acetone, ether, ketones, thinners or gasoline, as they can deform and discolor the case.

Organization of This Manual

Chapter 1
Product Outline

Explains the parts and functions of the unit.

Chapter 2
Measurement Procedure

Explains how to use the 3286 for measurement.

Chapter 3
Specifications

Lists the specifications of the 3286 CLAMP ON AC/DC HiTESTER.

Chapter 4
Battery Replacement

Explains how to replace the battery used to power the 3286.

Chapter 5
Attaching the Hand Strap

Explains how to attach the hand strap, for easy handling of the unit in the field.

Chapter 6
Troubleshooting

Describes how to check before requesting service.

Chapter 7
Service

Explains how to get the unit serviced.

Chapter 1
Product Outline

1.1 Product Outline

The "3286 CLAMP ON POWER HiTESTER" is designed to provide multiple functions by adopting a single-chip microcomputer. At any desired point of a single-phase circuit or three-phase circuit, this unit enables the measurement of voltage, current, power, power factor, phase angle, reactive power or frequency, and the detection of phase sequence on live lines.

When this unit is connected to the 9442 printer (DPU-414, Seiko Instrument Inc.) by a 9636 RS-232C cable (both purchased separately), the products DATA OUTPUT function can be used to output data to the printer.

1.2 Features

- A multi-function microcomputer
  The built-in microcomputer offers various functions in a compact form.
- Display of true rms values
  The true rms value conversion circuit allows accurate measurement of currents with distorted waveforms.
- Enables power measurement
  When both current and voltage are input simultaneously, the power factor, phase angle, reactive factor, as well as power can be measured, and phase detected.
- Enables harmonic measurement
  Higher harmonics of current and voltage up to the 20th order can be measured. Moreover, overall harmonic distortion factors and content can be displayed.
- DATA OUTPUT function
  Data can be output when the unit is directly connected to a printer. This function requires the optional 9442 printer (DPU-414, Seiko Instrument Inc.) and 9636 RS-232C cable.

1.3 Parts and Functions

Top and Side View

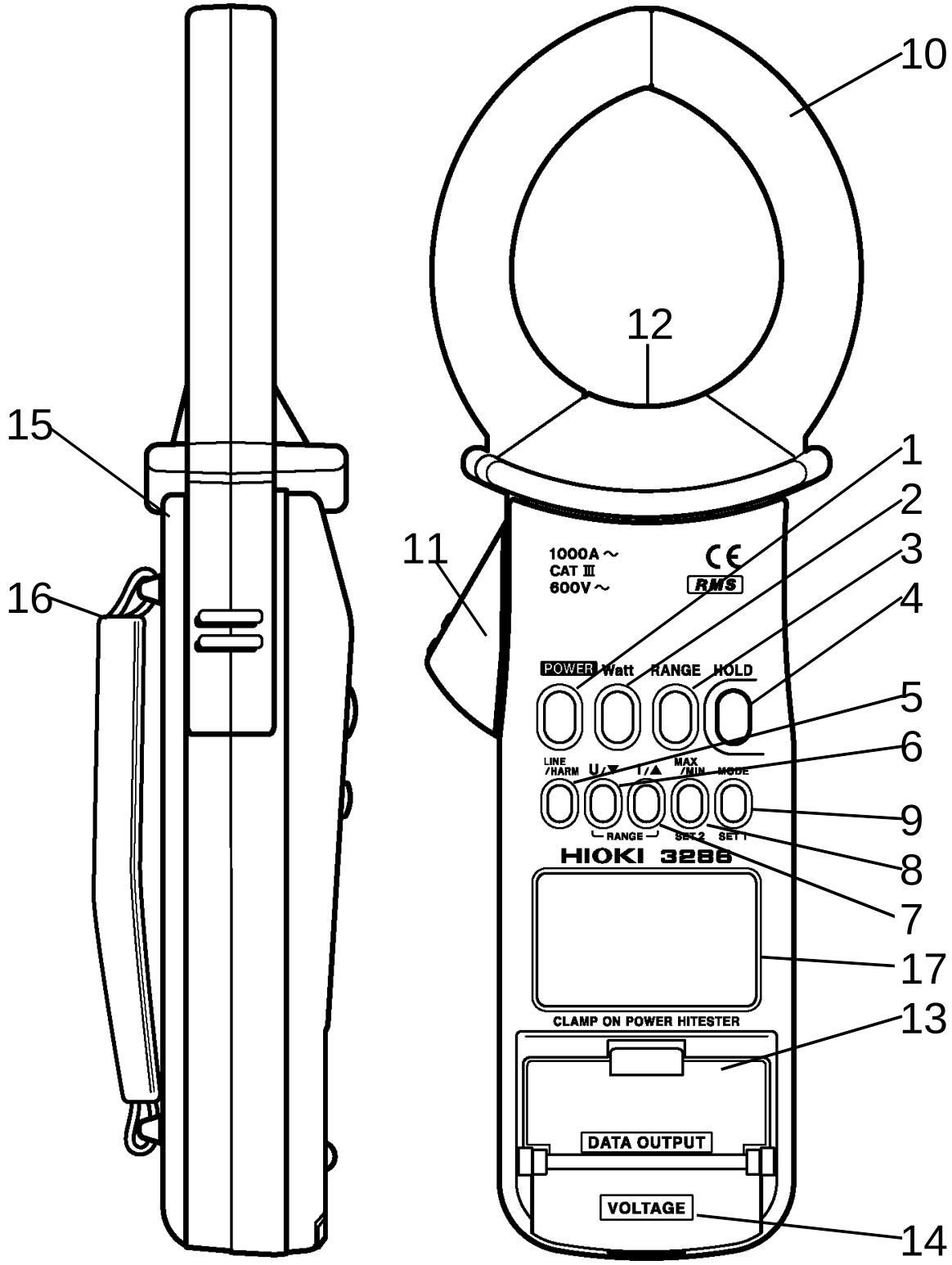

1. **POWER**
   - Used to turn power on/off
2. **Watt** key
   - Used to select the display of active power, apparent power, or power factor for the 1ϕ P meter.
   - Used to select the display of power factor, phase difference, or reactive factor for the 1ϕ PF meter.
   - Used to select the display of active power, apparent power, power factor, phase difference, or reactive factor for the 3ϕ PF meter.
3. **RANGE** key
   - Displays the current and voltage ranges, and enables the setting of these ranges. (The **U/▼** and **I/▲** keys are used to set these ranges.)
4. **HOLD** key
   - Holds the indicated value.
   - Used for the measurement condition save function.

     Holding down the **HOLD** key when powering off:
     The measurement conditions are saved to the internal memory when powering off. The measurement conditions are automatically restored when powering on.

     Holding down the **HOLD** key when powering on:
     Measurement conditions are reset to the initial values.
5. **LINE/HARM** key
   - Cycles through single-phase power measurement, three-phase power measurement, current harmonic measurement, and voltage harmonic measurement.

6. **U/▼** (RANGE) key
- Selects voltage display mode. Pressing this key in voltage display mode resets the peak-hold value.
- Switches MAX/MIN display of effective value and peak value during REC.
- Enables the setting of a voltage range in range setup mode.
- Lowers the order in harmonic display mode.

7. **I/▲** (RANGE) key
- Selects current display mode. Pressing this key in current display mode resets the peak-hold value.
- Switches MAX/MIN display of effective value and peak value during REC.
- Enables the setting of a current range in range setup mode.
- Raises the order in harmonic display mode.

8. **MAX/MIN** (SET2) key
- Switches the REC function on and off.

9. **MODE** (SET1) key
- Pressing this key in power display mode switches between current/voltage display and reactive power display.
- Pressing this key during harmonic measurement switches between overall harmonic distortion factor display (THD-R, THD-F) and harmonic content display.
- Pressing this key during REC lets you to check the elapsed time and remaining battery capacity.
- Used to start SETUP. (The unit is powered on with the **SET1** key held down.)

10. Clamp sensor

- To measure current, open the top ends of the clamp sensor by gripping the lever 11. Then position the conductor to be measured at the center of the clamp sensor and firmly close the clamp sensor.

11. Lever

- Used to open and close the clamp sensor.

12. Current direction mark

When measuring power, clamp the conductor with the arrow facing the load side.

13. Data Output terminal

Connected to the optional 9636 RS-232C cable to provide output.

14. Voltage measurement terminal

Connected to the 9635 test lead (red and black, supplied with the unit) to measure voltage and harmonic.

15. Back case

To replace the battery, remove the two screws.

16. Hand strap

Attach to get a better grip on the unit.

17. Display (LCD)

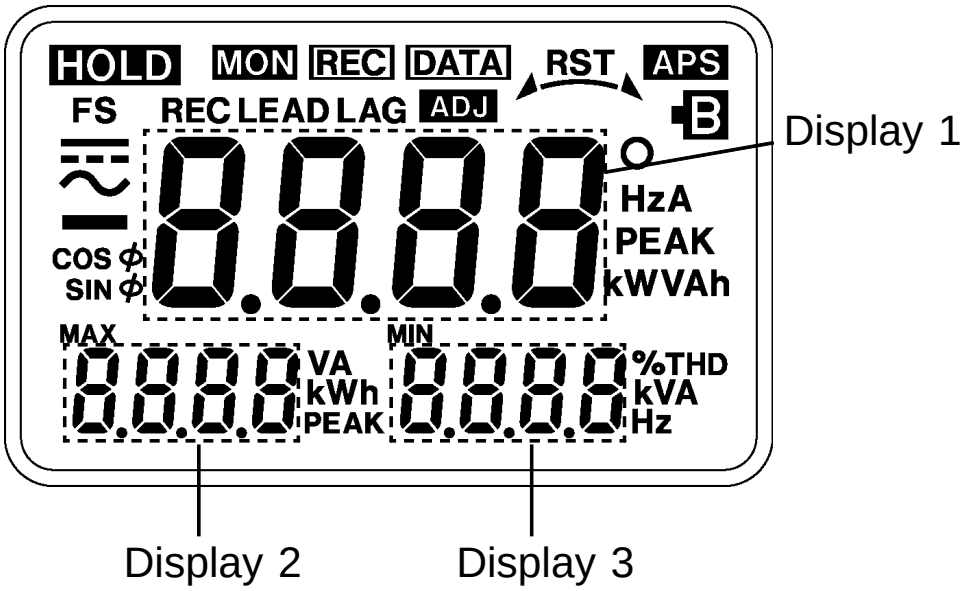

~	Alternating Current (AC)
cosϕ	Power factor
sinϕ	Reactive factor
HOLD	Data hold function
DATA	Data output
RST	Three-Phase
	Reverse phase
	Normal phase
	Missing phase
APS	Auto power off function
S	Slow
REC	Record function
LEAD	Lead phase
LAG	Lag phase
B	Battery low warning
○	Phase angle (deg.)
A	Current
PEAK	Wave peak value

W	Active power
VA	Apparent power
V	Voltage
MAX	Maximum value
MIN	Minimum value
%	Harmonic percentage
%THD	Total harmonic distortion ratio
Hz	Frequency
uAr	var (reactive power)
HOI.F	Total harmonic distortion ratio-F (A distortion rate against the basic wave.)
HOI.r	Total harmonic distortion ratio-R (A distortion rate toward the actual effective value.)

1.4 Flowchart of Key Operations

1.4.1 Current Measurements Mode

A point of view: This shows the way of changing on Display 1 to 3.

Display 1
Display 2, Display 3

LINE/HARM key

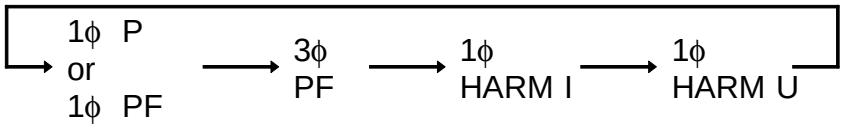

Watt key

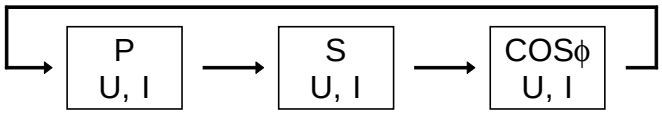

1ϕ P meter

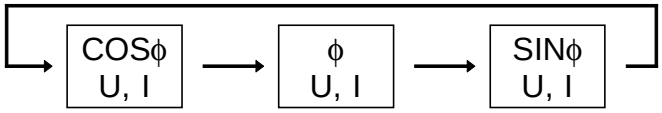

1ϕ PF meter

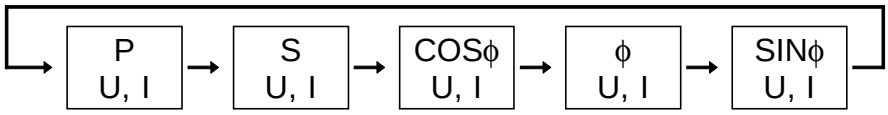

3ϕ PF meter

MODE key
(P,S only)

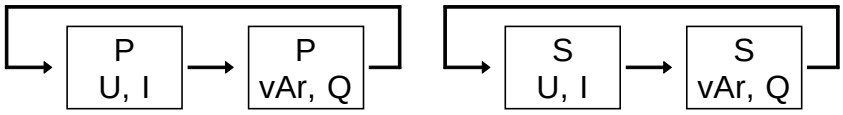

I/▲ key

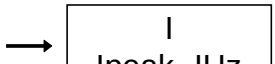

(Return to the power indication with the Watt key)

U/▼ key

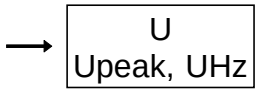

(Return to the power indication with the Watt key)

MAX/MIN key

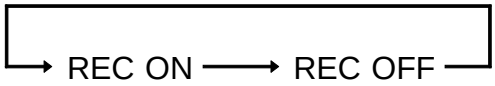

REC ON

Watt key

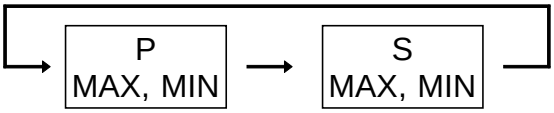

I/▲ key

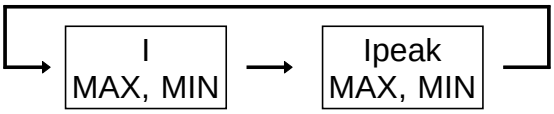

(Return to the power indication with the Watt key)

U/▼ key

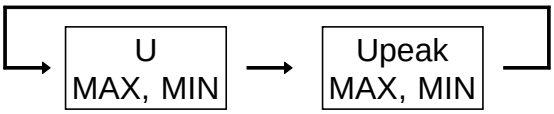

(Return to the power indication with the Watt key)

MODE key

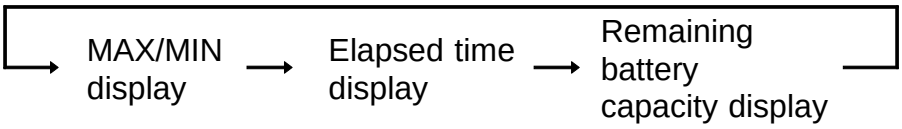

1.4.2 Harmonic Measurement

LINE/HARM key

1ϕ P or 1ϕ PF → 3ϕ PF → 1ϕ HARM I → 1ϕ HARM U

MODE key

THD-R → THD-F → Content

I/▲ key

1st order → 2nd-order → - - - - → 20th order

U/▼ key

20th order → 19th-order → - - - - → 1st order

1.4.3 Change the Range

RANGE key

Measurement value indication → RANGE indication

RANGE indication

I/▲ key

AUTOrange → 200Arange → 1000Arange

U/▼ key

AUTOrange → 150Vrange → 300Vrange → 600Vrange

Chapter 2 Measurement Procedure

2.1 Preparations

1. Remove the rear cover and insert a battery. (Refer to "Chapter4 Battery Replacement".)
2. Press **POWER** to turn the unit on. Verify that all segments of the display light up briefly. The model name then appears on Display 1 and battery state on Display 3.

bAtt 100	Fresh battery
bAtt 50	Battery capacity 50%
bAtt 0	Battery capacity 0 B Beep tone sounds 3 times

3. The measuring state of the 1ϕ P meter or 1ϕ PF meter is activated. (The unit was shipped from the factory with the 1ϕ P meter selected. For details, see 2.9, "SETUP Function.")

[Low battery voltage detection function]

After the B mark lights and battery voltage drops below a certain level, the power goes off automatically. When this occurs, "bAtt Lo" is displayed.

When power goes off after display of these marks, replace the exhausted battery with a new one.

[To initialize the saved contents]

Holding down the **RANGE** key when powering on initializes all the saved contents. (SETUP Function, measurement condition save Function)

2.2 Connections

Before conducting measurement, check the connections.

⚠ WARNING

- **Due to the risk of electric shock, connect the yellow cord not used for measurement to the part to which the black cord connects to prevent the clip from accidentally touching anyone.**

NOTE

- Be sure to connect the power clip to the part bearing the exposure voltage.

[Single-Phase Two-Wire Circuit]

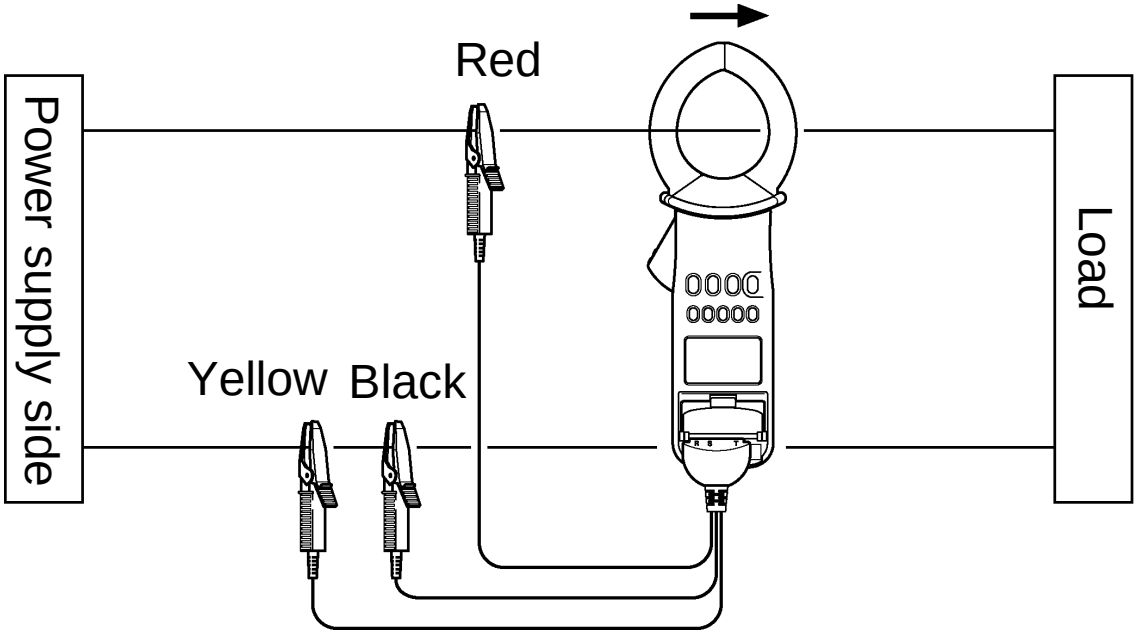

Figure 1.
Power Measurement on Single-Phase Two-Wire Circuit

[Single-Phase Three-Wire Circuit]

The power and power factor of a single-phase three-wire circuit are measured similar to measurement on a single-phase two-wire circuit. Connect the black cord to the neutral wire as shown in Figure 2, then switch the red cord and clamp sensor to the respective wires. In this way, the power and power factor between the wires can be measured.

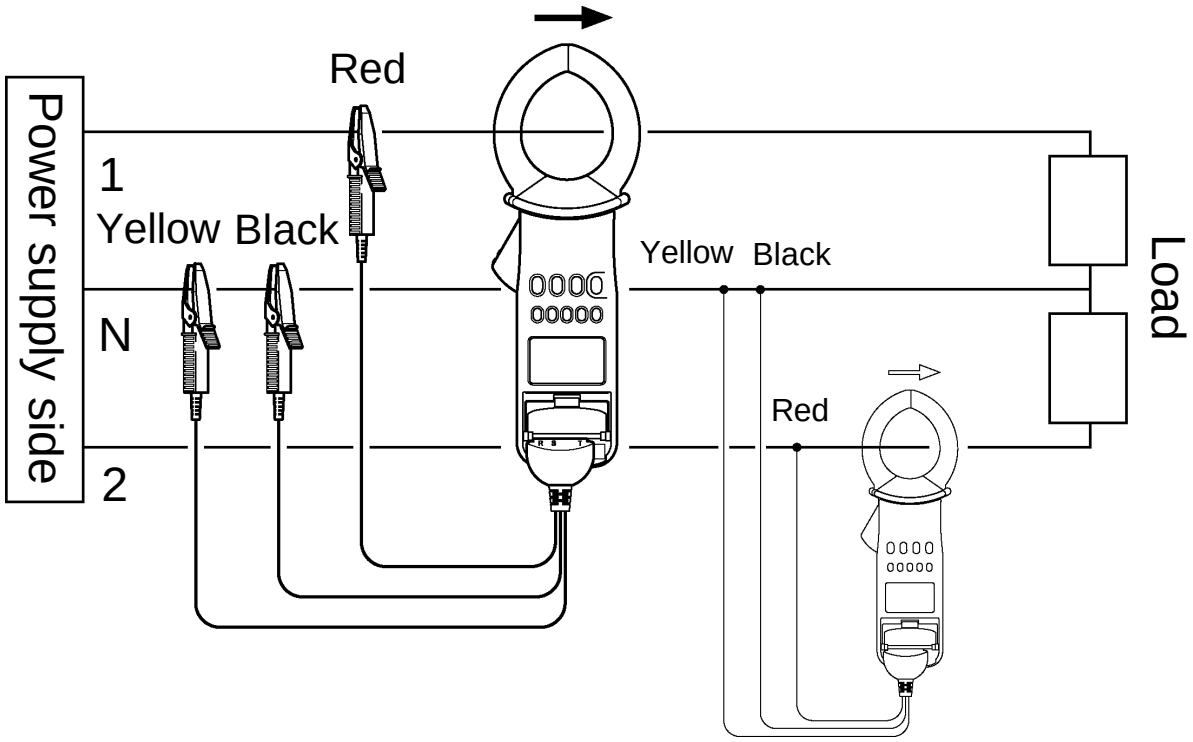

Figure 2. Power and power factor Measurement on Single-Phase Three-Wire Circuit

[Three-Phase Four-Wire Circuit]

Use another method of the power measurement of the figure 4 for the distortion wave.

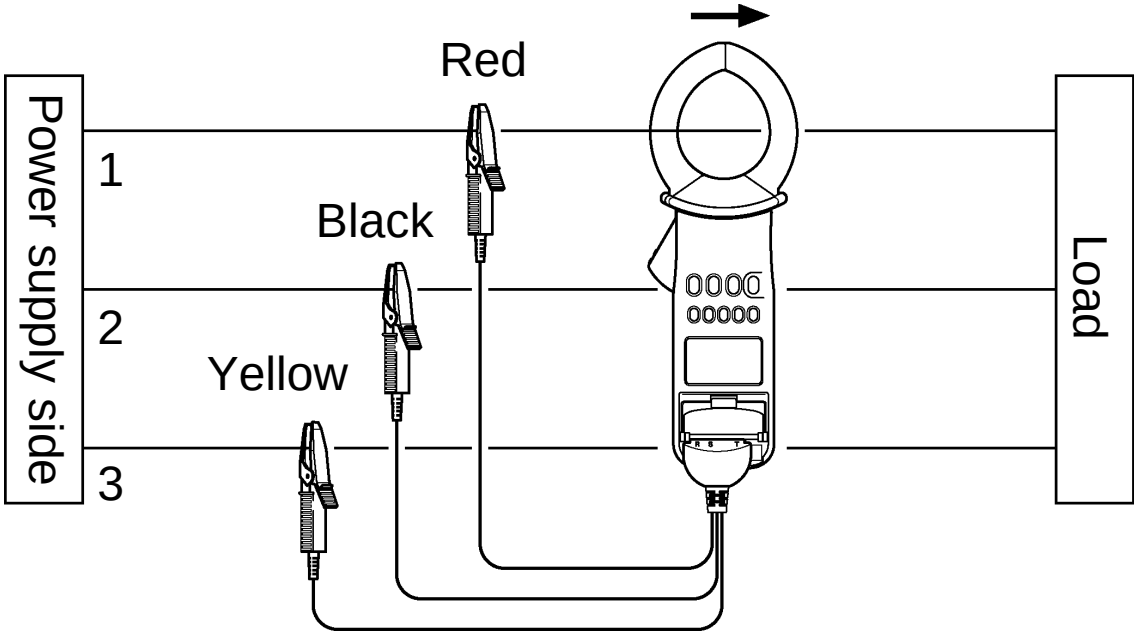

Figure 3. Power and power factor measurement on Three-Phase Three-Wire Circuit

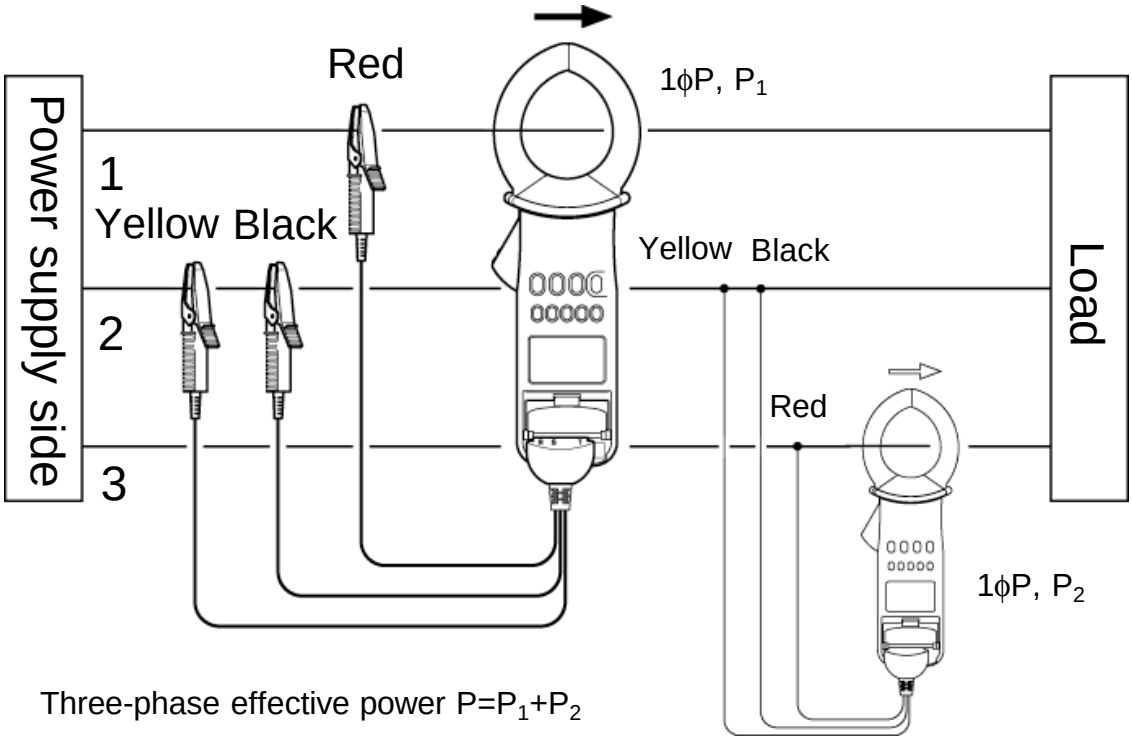

Figure 4. Another method of the power measurement on Three-Phase Three-Wire Circuit

[Three-Phase Four-Wire Circuit]

The power and power factor of a three-phase four-wire circuit are measured similar to measurement on a three-phase three-wire circuit (provided the load is balanced). No neutral wire is used for this measurement, however.

In case of unbalanced load, measurement is conducted similar to measurement on a single-phase two-wire circuit. Set the unit in single-phase measurement mode.

Connect the black cord to the neutral wire as shown in Figure 5, then switch the red cord and clamp sensor to the respective wires. In this way, the power and power factor between the wires can be measured.

(To use the phase sequence detection function, connect the voltage cords to the three wires, excluding the neutral wire, for measurement.)

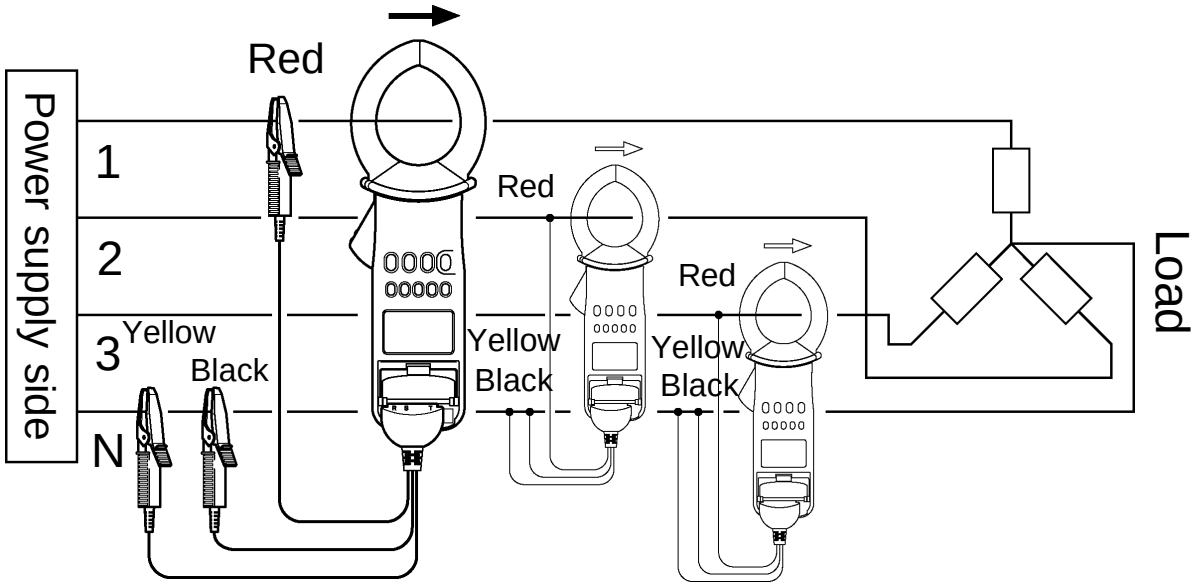

Figure 5. Power and power factor measurement on Three-Phase Four-Wire Circuit

[Current measurement]

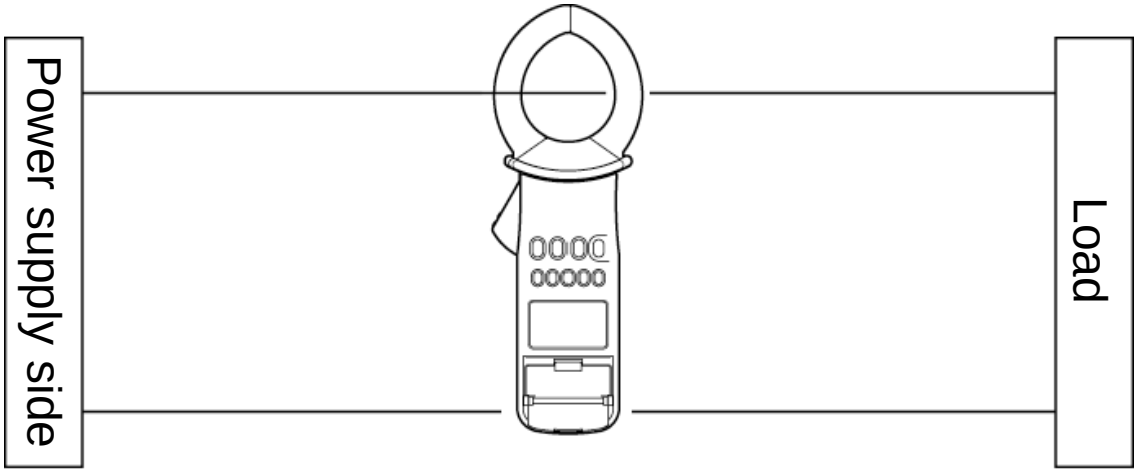

Figure 6. Current measurement

When only measuring current, the orientation of the clamp sensor is irrelevant. Moreover, the voltage cord need not be connected to the unit.

[Voltage measurement]

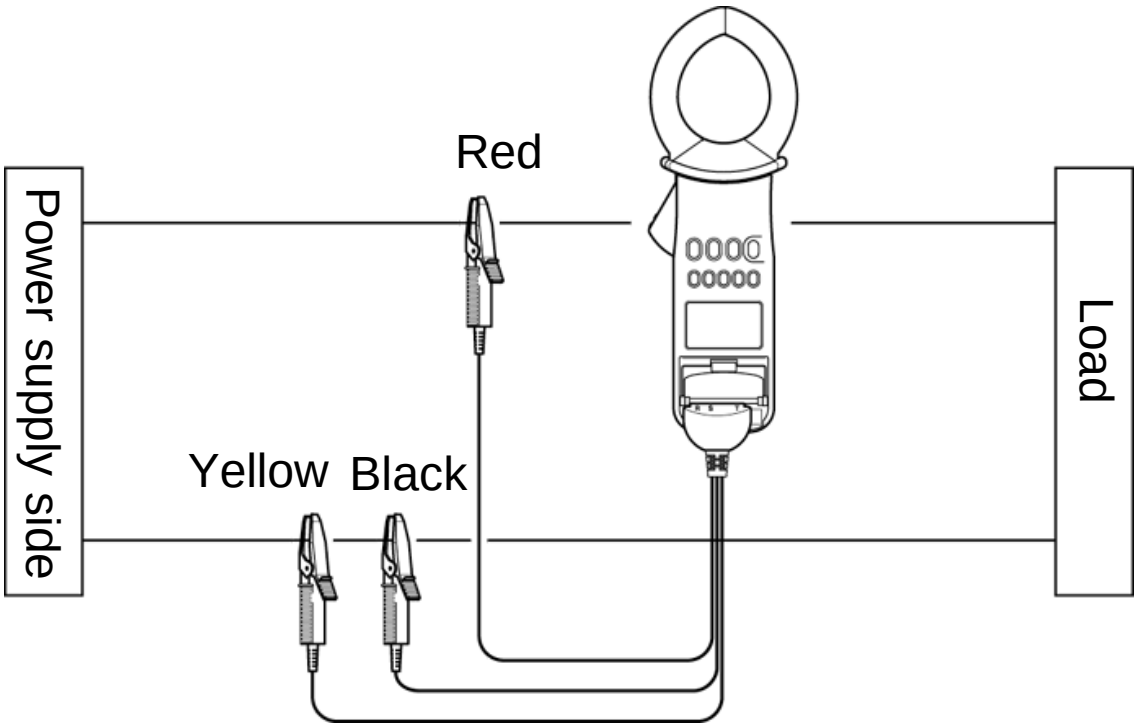

Figure 7. Voltage measurement

When only measuring voltage, the clamp sensor need not be clamped.

2.3 Range Setup

1. Press the **RANGE** key. The voltage range then appears on Display 2 and current range on Display 3. In this condition, Display 2 and Display 3 should be blinking.

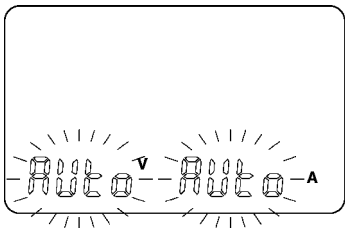

2. To change the voltage range, press the **U/▼** key. To change the current range, press the **I/▲** key. The power range varies with the combination of voltage and current ranges as listed in Tables 1 and 2.

I/▲ key → AUTOrange → 200Arange → 1000Arange

U/▼ key → AUTOrange → 150Vrange → 300Vrange → 600Vrange

Table 1.
Range Composition for Single-Phase Power Measurement

I \ U		Voltage range		
		150.0V	300.0V	600V
Current range	200.0A	30.00k	60.00k	120.0k
	1000A	150.0k	300.0k	600.0k
Unit		[W] or [VA] or [var]		

Table 2.
Range Composition for Three-Phase Power Measurement

I \ U		Voltage range		
		150.0V	300.0V	600V
Current range	200.0A	60.00k	60.00k 120.0k	240.0k
	1000A	300.0k	600.0k	600.0k 1200k
Unit		[W] or [VA] or [var]		

3. After changing the range, press the **RANGE** key. Display 2 and Display 3 then restore the measured values.

2.4 Power Measurement

NOTE

- Accurate measurement may be impossible in locations subject to strong external magnetic fields, such as transformers and high-current conductors, or in locations subject to strong external electric fields, such as radio transmission equipment.
- Make sure that only one conductor is clamped in the center of the clamp sensor. If you clamp single-phase (2-wire) or three-phase (3-wire) lines together, it will be impossible to measure.

2.4.1 1ϕ P Meter, 1ϕ PF Meter and 3ϕ PF Meter

[1ϕ P Meter]

Displays active power P once about every second (once about every three seconds in SLOW mode). The meter calculates apparent power S, reactive power Q, and power factor COS ϕ from active power P, voltage U, and current I. (See 3.3, "Operation Expressions.")

[1ϕ PF Meter and 3ϕ PF Meter]

The phase angle is measured at the zero-cross point of voltage U and current I as shown below. The meter calculates three-phase active power P, three-phase apparent power S, three-phase reactive power Q, and reactive factor SIN ϕ, and power factor COS ϕ from the phase angle ϕ, voltage U, and current I. (See 3.3, "Operation Expressions.")

For an inverter or thyristor with distorted input waveforms, or waveforms with noise superimposed, the meters may not display accurate values or even be able to measure at all.

Three-phase active power P is calculated on the 3ϕ PF meter under balanced load conditions. Accurate measurements cannot be conducted under an unbalanced load.

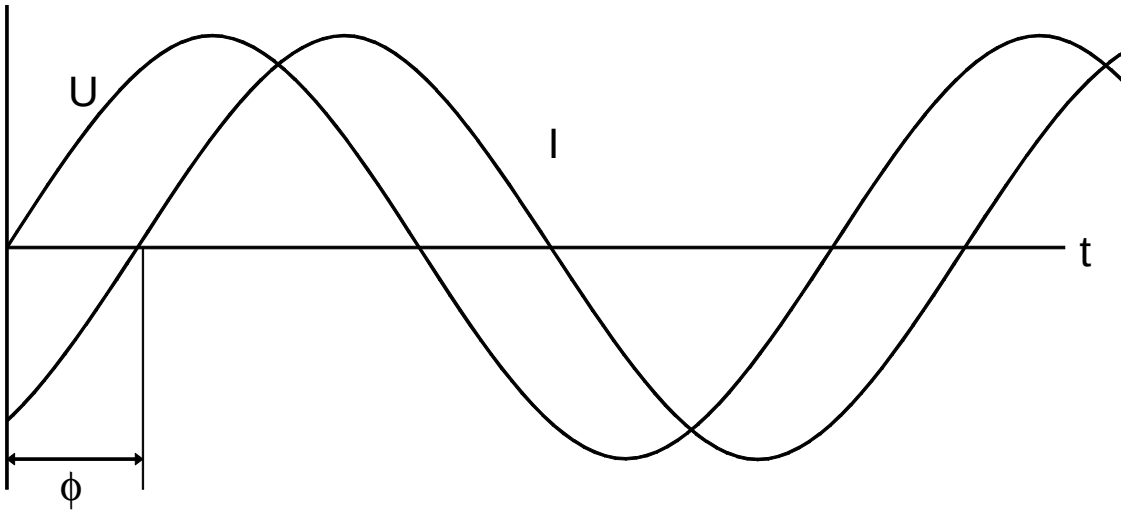

[Difference in λ between 1ϕ P Meter and 1ϕ PF Meter]

For distorted waveforms, the value of power factor λ may differ between the 1ϕ P meter and 1ϕ PF meter. The difference is due to the fact that the 1ϕ P meter calculates λ from active power and apparent power, while the 1ϕ PF meter assumes a sine wave and calculates λ from the phase angles of the voltage waveform and current waveform of that sine wave. Therefore, phase-angle measurement serves as the basis for the 1ϕ PF meter. Distorted waveforms and those with noise superimposed may prevent the meter from measuring power factors accurately or even at all. Therefore, use λ of the 1ϕ P meter for distorted waveforms.

Sample Measurements

I	U	1ϕ P Meter λ	1ϕ PF Meter λ
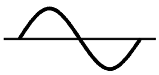	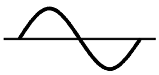	1.000	1.000
* 	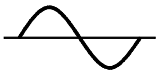	0.847	0.750

* Distorted waveforms with crest factor of 1.9.

Power factor λ of the 3ϕ PF meter is also obtained from the phase angles of voltage waveform and current waveform of an assumed sine wave. Therefore, accurate measurements may also not be conducted with distorted waveforms or those with noise superimposed. The following example shows the measurement of power factor λ from power values on a three-phase circuit.

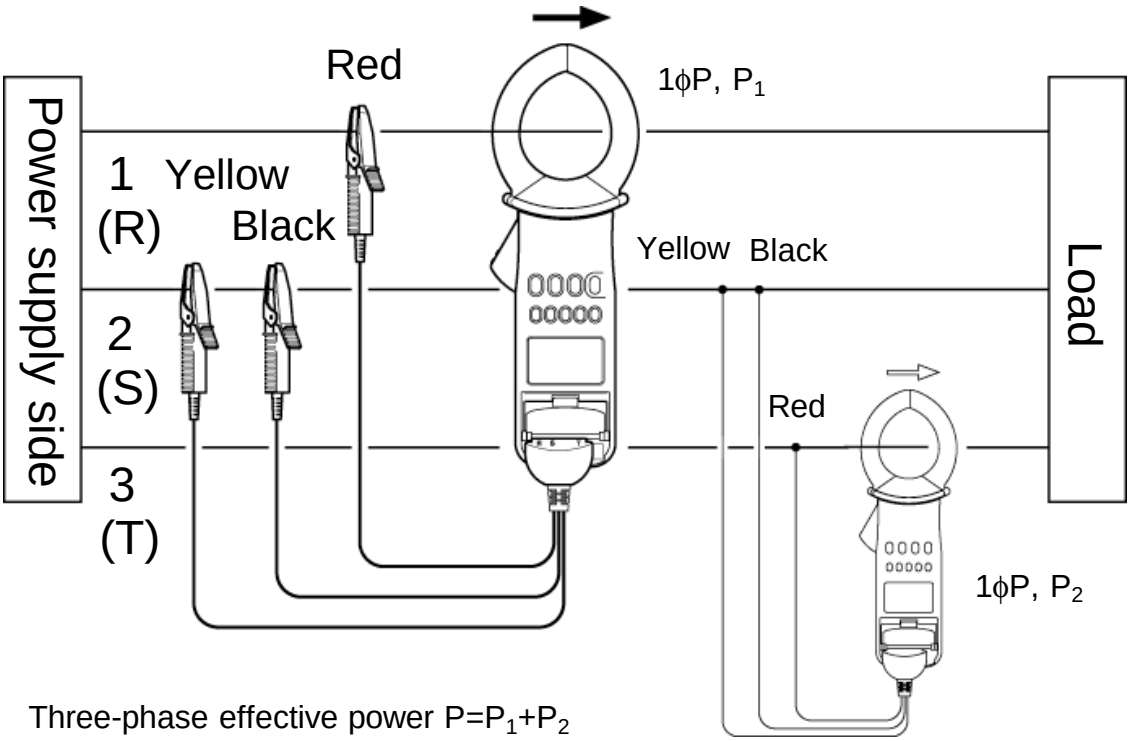

Three-phase effective power $P=P_1+P_2$

Measurement example

	P (1ϕ P)	S (1ϕ P)
R	-0.54 kW	2.61 kVA
T	1.98 kW	2.57 kVA

Three-phase effective power
P=P1+P2=-0.54+1.98=1.44 kW
Three-phase apparent power
S=(√3)/2 (2.61+2.57)=4.49 kVA
Power factor
λ=P/S=1.44/4.49=0.321

Table 3. Items Displayed (Marked OK) and Not Displayed (-)

	1ϕ P	1ϕ PF	3ϕ PF
Current I	OK	OK	OK
Voltage U	OK	OK	OK
Effective power P	OK	-	OK
Apparent power S	OK	-	OK
Reactive power Q	OK	-	OK
Power factor λ (COSϕ)	OK	OK	OK
Phase angle ϕ	-	OK	OK
Reactive factor SINϕ	-	OK	OK

2.4.2 Power and Power Factor

⚠ WARNING

- **Due to the risk of electric shock, connect the yellow cord not used for measurement to the part to which the black cord connects to prevent the clip from accidentally touching anyone.**

1. Press the **LINE/HARM** key to select the 1ϕ P meter, 1ϕ PF meter, or 3ϕ PF meter (RST goes on). (For switching between the 1ϕ P meter and 1ϕ PF meter, see 2.9, "SETUP Function.")

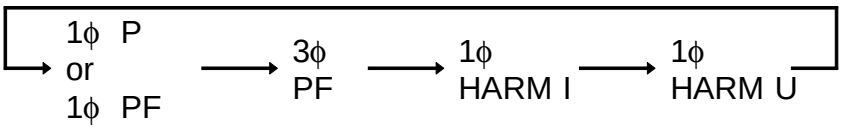

2. Connect the voltage cord to the unit, then connect the red cord, black cord, and yellow cord to the circuit under measurement according to prescribed connections. For a three-phase circuit, the unit will display the results of phase detection as follows:
   Normal phase RST
   Reverse phase RST
   Missing phase RST
3. Open the tip of the clamp core and clamp the conductor (on the side to which the red voltage cord is connected) roughly into the center of the clamp core, then conduct measurement. In this operation, clamp the conductor in such an orientation that the arrow mark on the clamp sensor surface points to the load side from the power supply side.
4. Select active power, apparent power, power factor, phase angle, or reactive factor with the **Watt** key. Note that the 1ϕ P meter does not display phase angle and reactive factor. The 1ϕ PF meter does not display active power and apparent power.

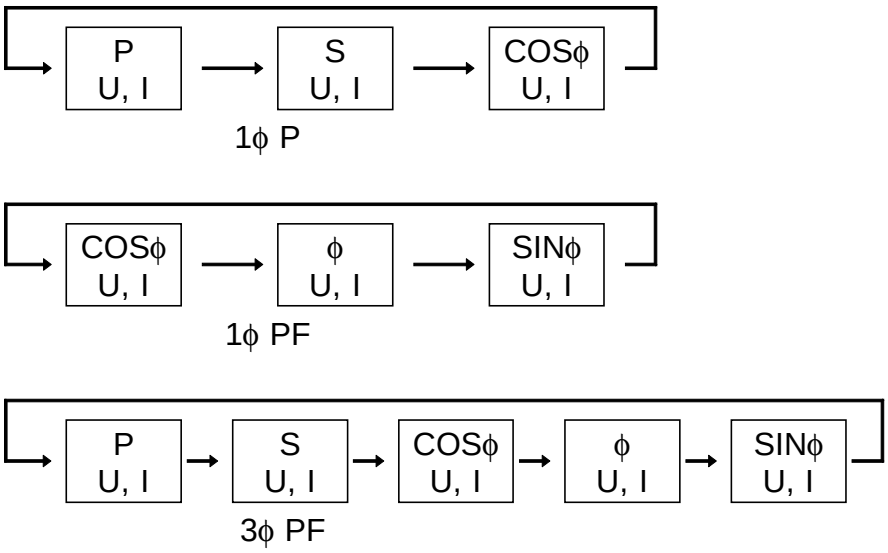

5. Pressing the **MODE** key in active power or apparent power display mode indicates reactive power. Pressing the **MODE** key again restores the current and voltage display.

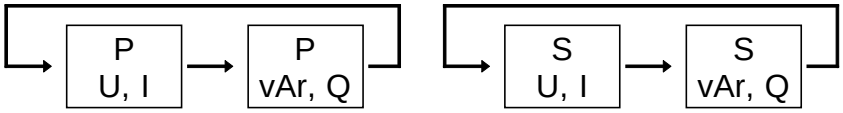

6. Switch between Auto Range and Manual Range, as needed. For details, see 2.3, "Range Setup."

NOTE

- The 3ϕ PF meter calculates P, Q and S under a balanced load.
- The 3ϕ PF meter cannot provide accurate measurement results under an unbalanced load.
- For a missing phase, the unit will not display any measured value. ("**- - - -**" will be displayed.)
- If the arrow mark on the surface of the clamp sensor points to the power supply side from the load side, the phase will be shifted by 180 degrees, thus disabling measurement. ("**- - - -**" will be displayed.)

2.4.3 Phase Detection

Press the **LINE/HARM** key to select the 3ϕ PF meter (RST goes on). Before starting measurement, check the connections. (See 2.2, "Connections.")
In a three-phase measurement, the unit will display phase detection results as follows:

Normal phase 

Reverse phase 

Missing phase 

NOTE

- If a load is connected to the electrical line while a phase is missing on the power supply side, voltage coming back from the load to the tester may cause normal or reverse phase to be displayed even though a phase is missing.

2.4.4 Current

1. Press the **I/▲** key to activate current display mode. In current display mode, the unit will indicate an effective value on Display 1, peak hold value on Display 2, and frequency on Display 3.
2. Switch between Auto Range and Manual Range, as needed. For details, see 2.3, "Range Setup."
3. Open the tip of the clamp core and clamp the conductor roughly into the center of the clamp core.
4. Pressing the **I/▲** key in current display mode resets the peak hold value.

NOTE

- Be sure to clamp one conductor only. Measurement is not possible for single phase or three phases when two or three conductors are respectively clamped at the same time.
- When only measuring current, there is no need to connect the voltage cord.
- Select the 1ϕ P meter, 1ϕ PF meter, or 3ϕ PF meter.
- The unit does not display polarities in a peak measurement.
- The peak hold value will not vary, unless a large value is entered in the unit. If the auto power-off function is effective, the unit will be shut down in about ten minutes, causing the data to be lost. (See 2.11, "Auto Power-Off Function.") One way to prevent data from being lost is to disable the auto power-off function (see 2.9, "SETUP Function") or to use the recording function.
- For measurement extending the auto power-off time, use the recording function.
- To check variations in a peak value, enable the REC function by pressing the **MAX/MIN** key, then activate peak value display mode by pressing the **I/▲** key.

NOTE

- Automatic frequency detection (AUTO), 50 Hz fixed, or 60 Hz fixed can be selected. In cases where the input fluctuates significantly, the indicated value will stabilize when 50 Hz or 60 Hz fixed is selected. For how to select, see the setup of measurement line frequency in SETUP mode. (For details, see 2.9, "SETUP Function.")
- There is a possibility to fluctuate 2 or 20 counts at the peak value display when the input becomes big.

2.4.5 Voltage

1. Press the **U/▼** key to activate voltage display mode. In voltage display mode, an effective value appears on Display 1, peak-hold value on Display 2, and frequency on Display 3.
2. Connect the voltage cord to the unit, then connect the red cord, yellow cord, and black cord to the circuit under measurement.
3. Switch between Auto Range and Manual Range, as needed. For details, see 2.3, "Range Setup."
4. Pressing the **U/▼** key in voltage display mode resets the peak-hold value.

NOTE

- Select the 1ϕ P meter, 1ϕ PF meter, or 3ϕ PF meter.
- The unit does not display polarities in a peak measurement.
- The peak hold value will not vary, unless a large value is entered in the unit. If the auto power-off function is effective, the unit will be shut down in about ten minutes, causing the data to be lost. (See 2.11, "Auto Power-Off Function.") One way to prevent data from being lost is to disable the auto power-off function (see 2.9, "SETUP Function") or to use the recording function.

NOTE

- For measurement extending the auto power-off time, use the recording function.
- To check variations in a peak value, enable the REC function by pressing the **MAX/MIN** key, then activate peak value display mode by pressing the **I/▲** key.
- Automatic frequency detection (AUTO), 50 Hz fixed, or 60 Hz fixed can be selected. In cases where the input fluctuates significantly, the indicated value will stabilize when 50 Hz or 60 Hz fixed is selected. For how to select, see the setup of measurement line frequency in SETUP mode. (For details, see 2.9, "SETUP Function.")
- There is a possibility to fluctuate 2 or 20 counts at the peak value display when the input becomes big.

2.5 Harmonic Measurement

2.5.1 Current Harmonics

1. Press the **LINE/HARM** key to activate harmonic current display mode.

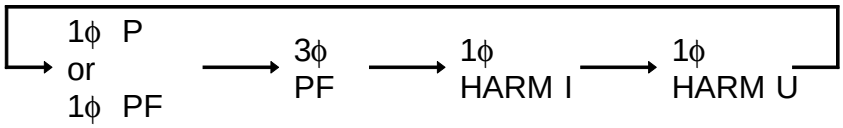

2. Switch between Auto Range and Manual Range, as needed. For details, see 2.3, "Range Setup."
3. Open the tip of the clamp core and clamp the conductor roughly into the center of the clamp core.
4. Press the **I/▲** and **U/▼** keys to select the order of harmonics to be measured.

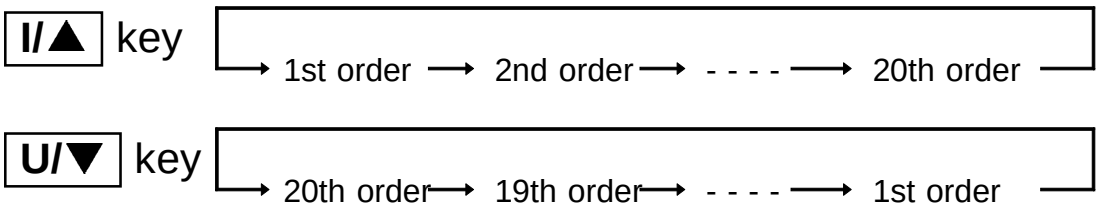

5. Switch between the total harmonic distortion ratio (THD-R, THD-F) and harmonic percentage from one to another, as needed, by pressing the **MODE** key.

MODE key → THD-R → THD-F → Content →

NOTE

- Be sure to clamp one conductor only. Measurement is not possible for single phase or three phases when two or three conductors are respectively clamped at the same time.
- Automatic frequency detection (AUTO), 50 Hz fixed, or 60 Hz fixed can be selected. In cases where the input fluctuates significantly, the indicated value will stabilize when 50 Hz or 60 Hz fixed is selected. For how to select, see the setup of measurement line frequency in SETUP mode. (For details, see 2.9, "SETUP Function.")
- For automatic frequency detection, the unit performs FFT operations only when the fundamental wave is covered within the 45 to 65 Hz range. The unit does not perform FFT operations outside this range.

2.5.2 Voltage Harmonics

1. Press the **LINE/HARM** key to activate harmonic voltage display mode.

   1ϕ P or 1ϕ PF → 3ϕ PF → 1ϕ HARM I → 1ϕ HARM U

2. Connect the voltage cord to the unit, then connect the red cord and black cord to the circuit under measurement.
3. Switch between Auto Range and Manual Range, as needed. For details, see 2.3, "Range Setup."
4. Press the **I/▲** and **U/▼** keys to select the order of harmonics to be measured.

I/▲ key: 1st order → 2nd order → - - - - → 20th order

U/▼ key: 20th order → 19th order → - - - - → 1st order

5. Switch between the total harmonic distortion ratio (THD-R, THD-F) and harmonic percentage, as needed, by pressing the **MODE** key.

MODE key: THD-R → THD-F → Content

NOTE

- Automatic frequency detection (AUTO), 50 Hz fixed, or 60 Hz fixed can be selected. In cases where the input fluctuates significantly, the indicated value will stabilize when 50 Hz or 60 Hz fixed is selected. For how to select, see the setup of measurement line frequency in SETUP mode. (For details, see 2.9, "SETUP Function.")
- For automatic frequency detection, the unit performs FFT operations only when the fundamental wave is covered within the 45 to 65 Hz range. The unit does not perform FFT operations outside this range.

2.6 Data Hold Function HOLD

This function freezes the counter at any desired point for easy reading.
Press the **HOLD** key. **HOLD** annunciator lights on the display and the digital display value is maintained.
The data hold function is available for all measurements.
To cancel the data hold function, press the **HOLD** key again.

2.7 SLOW Mode

If an indicated value fluctuates rapidly and is difficult to read, you can select a slower display update rate (about once every three seconds) to make it easier to read the indicated value. Set SLOW display by setting DISP in SETUP mode. (See 2.9, "SETUP Function.")

NOTE
- SLOW mode is not available for harmonic measurements.

2.8 Recording Function REC

The recording function can be used to display the maximum value, the minimum value or the present measured value.

1. **REC** annunciator will blink when you press the **MAX/MIN** key during a current or a voltage measurement. This function will have stored the measured data in the internal memory since the key is pressed.
2. The auto power-off function is automatically disabled. (**APS** annunciator is tuned off.)

3. Pressing the **MODE** key while using the recording function lets you check the elapsed time and remaining battery capacity.

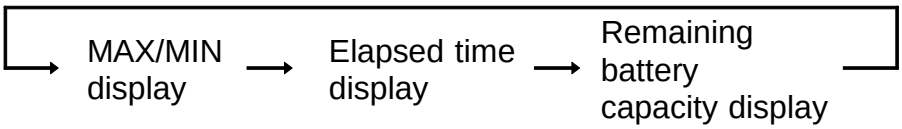

In elapsed time display, the unit indicates hours on Display 2 and minutes on Display 3.
When elapsed time is displayed with MAX or MIN blinking, a negative value is denoted.

4. The **HOLD** key will suspend the recording function. **HOLD** annunciator lights and **REC** annunciator stops blinking.
While **HOLD** is shown, the elapsed time is not increasing. By pressing the **HOLD** key once more, **HOLD** annunciator is off and the recording function resumes.

5. To reset the recording data during the recording function, press the **MAX/MIN** key.

NOTE

- When starting the recording function (**REC**) in an auto range, the range is set as the recording function is activated.

Items Displayed (Marked OK) and Not Displayed (-)

	1ϕ P	1ϕ PF	3ϕ PF
Current I	OK	OK	OK
Current peak value Ipeak	OK	OK	OK
Voltage U	OK	OK	OK
Voltage peak value Upeak	OK	OK	OK
Effective power P	OK	-	OK
Apparent power S	OK	-	OK

2.9 SETUP Function

The settings for this unit are made in SETUP mode. In SETUP mode, you can make settings for measurements, display, and ancillary functions.

1. Hold down the **SET1** key while powering on the unit by pressing the **POWER** key. This activates SETUP mode.
2. Select a setting item. The **MODE** key increments the item No.; the **MAX/MIN** key decrements the item No.
3. The settings can be modified using the **U/▼** key or **I/▲** key.
4. Pressing the **HOLD** key twice in succession restores the initial values for the setting items.
5. At unit power-off, "SAuE End" (SAVE END) appears and the settings are saved.
6. Details of Settings

Display 1 Item No.	Display 2 Item Name	Display 3 Setting	Initial Value
1-01	1P.PF	on / oFF	oFF
1-02	FrEq	AUto / 50Hz / 60Hz	AUto
1-03	SAMP	norM / SLou	norM
1-04	APS	on / oFF	on
1-05	bEEP	on / oFF	on

(1) Setup of single-phase power meter system
Item No. 1-01 1P.PF

ON Sets 1ϕ PF meter. on
OFF Sets 1ϕ P meter. oFF

(2) Setup of measurement line frequency

Item No. 1-02 FrEq

AUTO Automatically detects measurement line frequency. AUto

50 Hz Sets measurement line frequency to 50 Hz.

60 Hz Sets measurement line frequency to 60 Hz.

(3) Setup of display update rate

Item No. 1-03 SAMP (SAMP)

NORM Sets display update to normal rate (1 s). norM (NORMAL)

SLOW Sets display update to SLOW (3 s). SLou (SLOW)

(4) Setup of auto power-off function

Item No. 1-04 APS

ON Enables the auto power-off function. on

OFF Disables the auto power-off function. oFF

(5) Setup of buzzer function

Item No. 1-05 bEEP

ON Enables the buzzer function. on

OFF Disables the buzzer function. oFF

2.10 Measurement Condition Save Function

1. Hold down the **HOLD** key at unit power-off. The measurement conditions in effect at that point are saved.
2. The measurement conditions thus saved are the measurement line, power, harmonic display, current, and voltage ranges.

3. To return the saved measurement conditions to their initial values, hold down the **HOLD** key at unit power-on. After the entire LCD goes on, the unit will display "dAtA cLr", and the saved contents of measurement conditions are returned to their initial values.

2.11 Auto Power-Off Function APS

When **APS** annunciator is displayed, the auto power-off function is active.
If no key is pressed for about 10 minutes, the unit turns itself off automatically.
Immediately before turning off automatically, **APS** annunciator blinks and a beep tone is heard for about 30 seconds.
By pressing any key except **POWER** , you will extend the powered state for another 10 minutes.
To enable or disable the auto power-off function, set APS in SETUP mode. (See 2.9, "SETUP Function.")
Auto Power-Off function becomes ineffective while a REC function is used.

2.12 Battery Low Warning B

When this annunciator lights, the battery is exhausted and a correct measurement is not assured. Replace a new battery.
When the battery voltage drops below a certain level, the unit indicates "bAtt Lo" and is shut down.

2.13 Beep Tone

To enable or disable the audible buzzer when pressing a key, set BEEP in SETUP mode. (See 2.9, "SETUP Function.")

2.14 DATA OUTPUT

The 3286 is connected to the printer or the PC by using optional 9636 or 9636-01 respectively. See the instruction manual of the 9636 or the 9636-01 for the setup.

Chapter 3 Specifications

3.1 Measurement Specifications (23℃±5℃, 80% RH max.)

3.1.1 AC Current Measurement Specifications

Maximum permissible current	1000 Arms continuous
Effect of conductor position	within ±0.7% (in any position from sensor center)
External magnetic field interference	AC 400 A/m (external magnetic fields) corresponds to 2.0 A or less (display)
Voltage in measured circuit	max. 600 Vrms AC (insulated conductor)

AC current (true rms) I_{RMS}

Range (Accuracy Range)	Resolution	Accuracy	
		45Hz to 66Hz	30Hz to 45Hz, 66Hz to 1kHz
200.0A (10.0rmsA to 200.0rmsA)	0.1A	±1.3%rdg. ±3dgt.	±2.0%rdg. ±5dgt.
1000A (100rmsA to 1000rmsA)	1A	±1.3%rdg. ±3dgt.	±2.0%rdg. ±5dgt.

AC current (wave peak value) I_{PEAK}

Range (Accuracy Range)	Resolution	Accuracy
		30Hz to 1kHz
200A (10.0Arms to 200.0Arms)	1A	±3.0%rdg. ±5dgt.
1000A (100Arms to 1000Arms)	1A	±3.0%rdg. ±5dgt.

3.1.2 AC Voltage Measurement Specifications

AC voltage (true rms) U_{RMS}

Range (Accuracy Range)	Resolution	Accuracy	
		45Hz to 66Hz	30Hz to 45Hz, 66Hz to 1kHz
150.0V (10.0rmsV to 150.0rmsV)	0.1V	±1.0%rdg. ±3dgt.	±1.5%rdg. ±5dgt.
300.0V (30.0rmsV to 300.0rmsV)	0.1V	±1.0%rdg. ±3dgt.	±1.5%rdg. ±5dgt.
600V (60rmsV to 600rmsV)	1V	±1.0%rdg. ±3dgt.	±1.5%rdg. ±5dgt.

AC voltage (wave peak value) U_{PEAK}

Range (Accuracy Range)	Resolution	Accuracy
		30Hz to 1kHz
150V (10.0Vrms to 150.0Vrms)	1V	±3.0%rdg. ±5dgt.
300V (30.0Vrms to 300.0Vrms)	1V	±3.0%rdg. ±5dgt.
600V (60Vrms to 600Vrms)	1V	±3.0%rdg. ±5dgt.

3.1.3 Specifications of Single-phase Power Measurement 1ϕ P Meter

Measurement condition	Single phase, 50/60 Hz
Measurement range	Effective measurement current range: 10 A to 1000 A Effective measurement voltage range: 80 V to 600 V
Out of range	If either the current (line current) range or voltage (line voltage) range is out of range, power measurement will also be out of range.
Active power measurement	

Voltage \ Current		Current Range	
		200.0A	1000A
Voltage Range	150.0V	30.00kW	150.0kW
	300.0V	60.00kW	300.0kW
	600V	120.0kW	600.0kW

Measurement accuracy	±2.3%rdg.±5dgt. (cosϕ=1)

Apparent power S, reactive power measurement Q, power factor COSϕ

Method of measurement	Obtained by calculation from active power, current, and voltage measurements.
Measurement accuracy	±1 dgt. with respect to calculation from each measured value.
Measurement range	[W] in the above table is replaced by [VA] or [var].

3.1.4 Specifications of Power Factor and Phase Angle Measurements 1ϕ PF Meter and 3ϕ PF Meter

Measurement conditions	Singe phase/balanced three phases, 50/60 Hz, sine wave
Measurement range	Effective measurement current range: 10 A to 1000 A Effective measurement voltage range: 80 V to 600 V

Phase angle measurement ϕ

Method of measurement	Obtained from phase detection circuit.
Measurement range	

Measurement Mode	Resolution	Measurement Range	Accuracy
ϕ	0.1°	LEAD 90° to 0 to LAG 90°	±3°

Power factor measurement λ

Method of measurement	Obtained by calculation from phase angles.
Measurement range	

Measurement Mode	Resolution	Measurement Range	Accuracy*
cosϕ	0.001	LEAD 0 to 1 to LAG 0	±3° ±2dgt.

* Calculating error of ±2 dgt. is added to phase angle measurement error.

Reactive factor measurement

Method of measurement	Obtained by calculation from phase angles.
Measurement range	

Measurement Mode	Resolution	Measurement Range	Accuracy*
sinϕ	0.001	LEAD 0 to 1 to LAG 0	±3° ±2dgt.

* Calculating error of ±2 dgt. is added to phase angle measurement error.

3.1.5 Specifications of Balanced Three-phase Power Measurements

Active and apparent power measurements	
Measurement conditions	Balanced three phases, 50/60 Hz, sine wave
Method of measurement	Active power calculated from apparent power and phase angle information.

Measurement range (Active power P/Apparent power S)

Voltage \ Current		Current (Line Current) Range	
		200.0A	1000A
Voltage (Line Voltage) Range	150.0V	60.00kW	300.0kW
	300.0V	60.00kW 120.0kW	600.0kW
	600V	240.0kW	600.0kW 1200kw

For apparent power, [W] is replaced by [VA].

Measurement accuracy	±3.0%rdg. ±10dgt. (cosϕ=1)

Reactive power measurement Q	
Method of measurement	Obtained by calculation from active and apparent powers.
Measurement accuracy	±1 dgt. with respect to calculation from each measured value.
Measurement range	The unit of [W] in the above table is

3.1.6 Specifications of Frequency Measurement

Measurement ranges
(For current measurement/voltage measurement)

Range (Accuracy Range)	Resolution	Accuracy
100.0Hz (30.0Hz to 100.0Hz)	0.1Hz	±0.3%rdg.±1dgt.
1000Hz (100Hz to 1000Hz)	1Hz	±1.0%rdg.±1dgt.

Minimum input	Current: 10.0 Arms, Voltage: 10.0 Vrms

3.1.7 Specifications of Harmonic Measurement

Measurement condition	Fundamental wave frequency: 50/60 Hz
Measurement function	AC current/AC voltage
Harmonic analysis	
Window width	1 cycle (50/60 Hz)
Type of window	Rectangular
Number of analysis data	256 points
Order of analysis	1st order to 20th order
Analysis item	
Harmonic level	Harmonic levels of current and voltage
Harmonic percentage	Harmonic percentage of current and voltage
Total harmonic distortion ratio	Total harmonic distortion ratio of current and voltage (THD-F and THD-R)

Measurement accuracy

Harmonic levels

Order	Accuracy
1	±3.0%rdg.±10dgt.
2 to 6	±3.5%rdg.±10dgt.
7 to 8	±4.5%rdg.±10dgt.
9 to 10	±5.0%rdg.±10dgt.
11 to 15	±7.0%rdg.±10dgt.
16 to 20	±10%rdg.±10dgt.

Harmonic percentage	±1 dgt. with respect to calculation from each measured value.
Total harmonic distortion ratio	±1 dgt. with respect to calculation from each measured value.

3.2 General Specifications

Operating system	Digital sampling system Phase detection system

	Single-phase Power Measurement	Power Factor & Phase Angle Measurement
Waveform	Digital sampling	-
Phase	-	Phase detection

	Three-phase Power Measurement	Harmonic Measurement Function
Waveform	Digital sampling	Digital sampling
Phase	Phase detection	-

❍ Accessory Functions:

Phase detection (at 3-phase balanced load)	Normal/ Reverse/ Missing (50/60 Hz, sine wave)
Recording	Maximum (MAX) and minimum (MIN) values display selectable for current, voltage, and effective / apparent power measurements
Data hold	Data hold function

Auto power-off	Automatic shutdown after 10.5 ±1 minutes. Beep tone warning before the shutdown. Extending and disabling possible.
Battery low voltage power-off	When the battery voltage falls below a certain level, the function shuts down the unit to prevent malfunctions.
Beep tone	ON/OFF
❍ Display	LCD panel
Digital counter	6000 counts max.
Over-range display	"**O.L.**"
Data hold annunciator	**HOLD**
Auto power-off annunciator	**APS**
Battery low warning	B
Battery low voltage power-off	**bAtt Lo** (7 segments used) Power turned off after display.
Display update rate	Digital counter NORMAL 1s±50ms (approx. 1 time/second) SLOW 3s±0.15s (approx. 1 time/3 seconds) HARM meas. 2s±0.1s (approx. 1 time/2 seconds)
Display response time	The range is fixed, 0% to 90%, 3.5 s max. Phase measurement, 4.0 s max.
Range switching	Auto range, manual (fixed) range (selectable). The power range depends on current and voltage ranges.
Circuit dynamic characteristics (crest factor)	2.5 max. (1.7 for 1000 A range and 600 V range)
Withstand voltage	Clamp sensor - Chassis, clamp sensor - circuit: 5.55 kV AC for 1 minute
Zero suppression	5 counts (for current and voltage measurement)

Location for use	Indoor, altitude up to 2000 m (6562 feet)
Applicable standards	Safety: EN 61010-1:1992+A2:1995 CAT III (expected transient overvoltage: 6000 V), Pollution level 2, EN 61010-2-031:1994 EN 61010-2-032:1995 EN 60529:1991 IP40 (protected against access to hazardous parts with a wire) EMC: EN 61326-1:1997+A1:1998
Maximum conductor diameter for measurement	ϕ 55 mm max.
Operating temperature and humidity range	0 to 40℃ (32 to 104℉), 80%RH or less (no condensation)
Temperature characteristics	
Current and voltage measurement	In 0 to 40℃ range: 0.1 x accuracy specifications/℃
Phase detection circuit	In 0 to 40℃ range: Within ±2 deg.
Storage temperature range	-10 to 50℃ (14 to 122℉, no condensation)
Power source	6LR61, 6LF22 alkaline battery 9V x 1
Output function	Optical insulation output (using optional 9636 RS-232C cable)
Maximum power consumption	220 mVA
Battery life	Alkaline battery (6LR61, 6LF22) approx. 25 hours Manganese battery (6F22) approx. 10 hours
External dimensions	62(W) x 260(H) x 39(D) mm 2.44"(W) x 10.24"(H) x 1.54"(D)
Mass	Approx. 550 g Approx. 19.4 oz.

Accessories	9355 CARRYING CASE	1
	9635 VOLTAGE CORD	1
	Hand Strap	1
	6LF22 (battery)	1
	Instruction manual	1
Options	9636 RS-232C CABLE 9636-01 RS-232C PACKAGE 9442 PRINTER (DPU-414, Seiko Instrument Inc.)	

3.3 Operation Expressions

General operation expressions

Function	Item	Symbol	Operation Expression
Current measurement	Current (Effective value)	I [Arms]	$\sqrt{\frac{1}{M}\sum_{n=0}^{M-1} I_n^2}$
Voltage measurement	Voltage (Effective value)	U [Vrms]	$\sqrt{\frac{1}{M}\sum_{n=0}^{M-1} U_n^2}$
Single-phase power measurement 1ϕ P meter	1ϕ active power	P [W]	$\frac{1}{M}\sum_{n=0}^{M-1} U_n \cdot I_n$
	1ϕ apparent power	S [VA]	$U \cdot I$
	1ϕ reactive power	Q [var]	$\sqrt{S^2 - P^2}$
	1ϕ power factor	λ	$\frac{P}{S}$

Function	Item	Symbol	Operation Expression
Single-phase power factor and phase angle measurements 1ϕ PF meter (Sine wave, 50/60 Hz)	1ϕ power factor	λ	cosϕ
	1ϕ reactive factor		sinϕ
Balanced three-phase power factor, phase angle, and power measurements 3ϕ PF meter (Balanced three phases, sine wave, 50/60 Hz)	3ϕ power factor	λ(3ϕ)	For line current I_R lags U_{RS}: cos |ϕ-30° | For line current I_R leads U_{RS}: cos (|ϕ|+30°)
	3ϕ reactive factor		For line current I_R lags U_{RS}: sin |ϕ-30° | For line current I_R leads U_{RS}: sin (|ϕ|+30°)
	3ϕ active power	P(3ϕ) [W]	$\sqrt{3} \cdot \lambda_{(3\phi)} \cdot S_{(1\phi)}$
	3ϕ apparent power	S(3ϕ) [VA]	$\sqrt{3} \cdot S_{(1\phi)}$
	3ϕ reactive power	Q(3ϕ) [var]	$\sqrt{S_{(3\phi)}^2 - P_{(3\phi)}^2}$

Remarks:

M: Sampling number

n: Sample point number

ϕ: Phase difference between line voltage U_{RS} and line current I_R

Harmonic operation expressions

Item		Symbol	Operation Expression
Harmonic current	Effective value	I_k [Arms]	$\sqrt{I_{kr}^2 + I_{ki}^2}$
	k-th harmonic content		$\frac{I_k}{I_1} \times 100$ (%)
	Overall harmonic distortion factor	*THD-F* [%]	$\frac{\sqrt{\sum_{k=2}^{20} I_k^2}}{I_1} \times 100$ (%)
		THD-R [%]	$\frac{\sqrt{\sum_{k=2}^{20} I_k^2}}{I} \times 100$ (%)
Harmonic voltage	Effective value	U_k [Vrms]	$\sqrt{U_{kr}^2 + U_{ki}^2}$
	k-th harmonic content		$\frac{U_k}{U_1} \times 100$ (%)
	Overall harmonic distortion factor	*THD-F* [%]	$\frac{\sqrt{\sum_{k=2}^{20} U_k^2}}{U_1} \times 100$ (%)
		THD-R [%]	$\frac{\sqrt{\sum_{k=2}^{20} U_k^2}}{U} \times 100$ (%)
Remarks: *k*: Harmonic order			

Chapter 4 Battery Replacement

⚠ WARNING

- **To avoid electric shock when replacing the battery, first disconnect the voltage cable or clamp from the object to be measured. After replacing the battery, always replace the cover and tighten the screw before using the unit.**
- **When replacing the battery, be sure to insert them with the correct polarity. Otherwise, poor performance or damage from battery leakage could result. Replace battery only with the specified type.**
- **To avoid the possibility of explosion, do not short circuit, disassemble or incinerate batteries.**
- **Handle and dispose of batteries in accordance with local regulations.**

⚠ CAUTION

- Do not use the product if the battery is exhausted (when the B mark lights in the display area). Be sure to replace the exhausted battery with a new one.
- When replacing the battery, make sure that the metal battery snap fitting is firmly connected. If the metal fitting is loose, adjust it and recheck the connection.
- To avoid corrosion from battery leakage, remove the batteries from the product if it is to be stored for a long time.

1. Remove the two fastening screws of the rear cover, using a Phillips screwdriver.
2. Remove the rear cover.
3. Remove the old battery without pulling the codes of the snap.
4. Securely connect the battery to the battery snap.
5. Replace the rear cover and tighten the fastening screws.

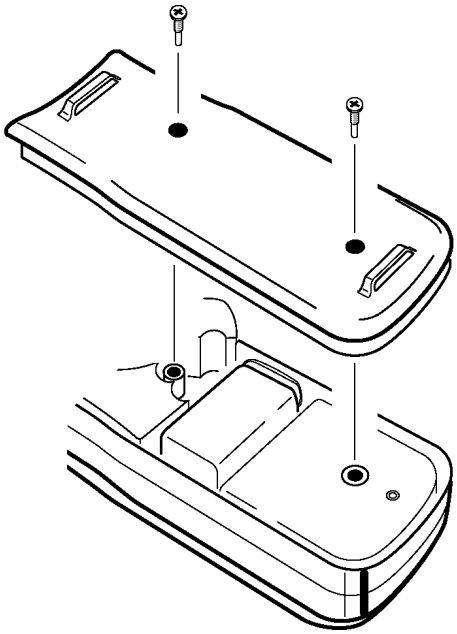

Chapter 5
Attaching
The Hand Strap

Explains how to attach the hand strap, for easy handling of the unit in the field.

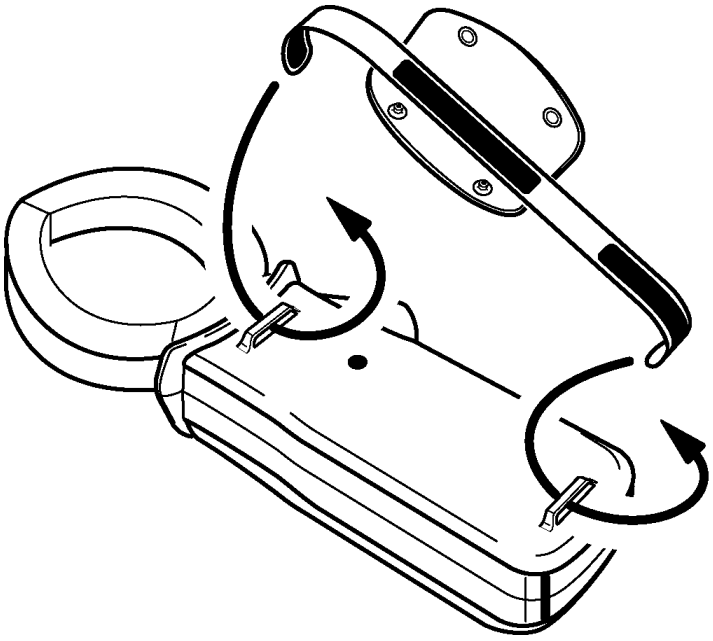

Chapter 6
Troubleshooting

If the unit seems not to be working normally, check the following points first before requesting service.

Symptom	Battery	Battery clip	Voltage cable
Unit does not come on.	Yes	Yes	
-B indication appears and unit immediately turns off.	Yes		
-B indication appears.	Yes		
Unit turns off during use.*	Yes	Yes	
Voltage cannot be measured.			Yes
Remedy: If problem persists, request service.	Replace battery.	Check connection of battery to clip.	Check voltage cord for broken wire.

NOTE * When APS (auto power-off) is effective, the unit is automatically shut down when no key is pressed for about 10 minutes. (See 2.11, "Auto Power-Off Function.")

Symptom	Confirmation item. and etc.
Cannot be measured. "**- - - -**" will be displayed. Becomes fixed.	(1ϕ PF meter, 3ϕ PF meter) Confirm the direction of the clamp sensor, and connections of the voltage cable. (Frequency measurement) Check the waveform. Some special frequencies can't be measured, such as those of inverters. Check that the input value corresponds to 10A or less and 10V or less.
The desirable measurement data aren't taken. (The measured value is smaller or larger than the estimated value.	(1ϕ P meter, 1ϕ PF meter, 3ϕ PF meter) Confirm the direction of the clamp sensor, and Connections of the voltage cable. Check that the clamp sensor is firmly closed. Check that the battery warning annunciator B is off.
The display fluctuates largely at the peak display.	There is a possibility to fluctuate 2 or 20 counts when the input becomes big.
Data cannot be outputted.	See the instruction manual of the 9636 or the 9636-01.
If the cause cannot be determined after troubleshooting, reset to their initial values. To reset, hold down the **RANGE** key at unit power-on. The entire LCD will go on, and "ALL clr" will appear. This resets the saved contents to their initial values.	

Symptom	Treatment
An indication Err1 to Err5 appears.	Send the unit for repair.

Chapter 7
Service

- The minimum stocking period for replacement parts is five years after end of production.
- If damage is suspected, check the "Troubleshooting" section before contacting your dealer or HIOKI representative.
- For information regarding service, please contact your dealer or the nearest HIOKI representative.
- If the unit is not functioning properly, check the battery. If a problem is found, contact your dealer or HIOKI representative. Pack the unit carefully so that it will not be damaged during transport, and write a detailed description of the problem. HIOKI cannot bear any responsibility for damage that occurs during shipment.

HIOKI

DECLARATION OF CONFORMITY

Manufacturer's Name:	HIOKI E.E. CORPORATION
Manufacturer's Address:	81 Koizumi, Ueda, Nagano 386-1192, Japan
Product Name:	CLAMP ON POWER HiTESTER
Model Number:	3286
Accessory:	9635 VOLTAGE CORD
Options:	9636 RS-232C CABLE 9636-01 RS-232C PACKAGE

The above mentioned products conform to the following product specifications:

Safety:	EN61010-1:1993+A2:1995 EN61010-2-031:1994 EN61010-2-032:1995
EMC:	EN61326-1:1997+A1:1998 ClassB equipment Portable test and measurement equipment

Supplementary Information:

The product herewith complies with the requirements of the Low Voltage Directive 73/23/EEC and the EMC Directive 89/336/EEC.

HIOKI E.E. CORPORATION

7 August 2001

Yuji Hioki

President

3286A999-01